ACTIVESHOP®

USER MANUAL

Azzurro 870 electric cosmetic chair 3 motors



Importer:

ACTIVESHOP Sp. z o.o.
8b Graniczna St., building
DC2A 54-610 Wrocław,
Poland
www.activeshop.com.pl
Rev. A/05/2024

III

CE

Before using the cosmetic chair, read the instructions and perform the following steps:

1. Make sure all packaging materials have been removed.
2. Make sure the chair is in working order.
3. Place the cosmetic chair in the area where it will be used.
4. Plug the power plug into a suitable outlet.

Tip! Children and inexperienced people must not use this device. Children must be supervised and must not play near the cosmetic chair.

Dimensions of the device:

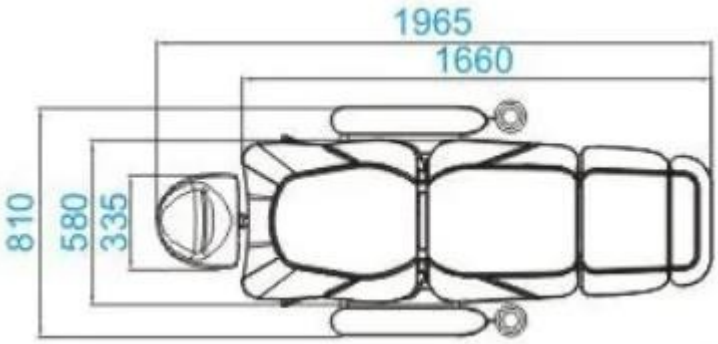

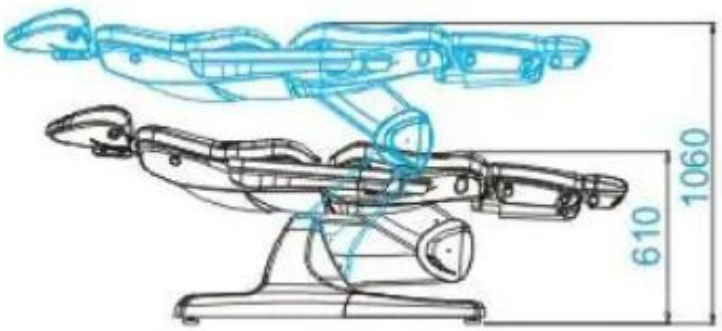



Control remote control functions:

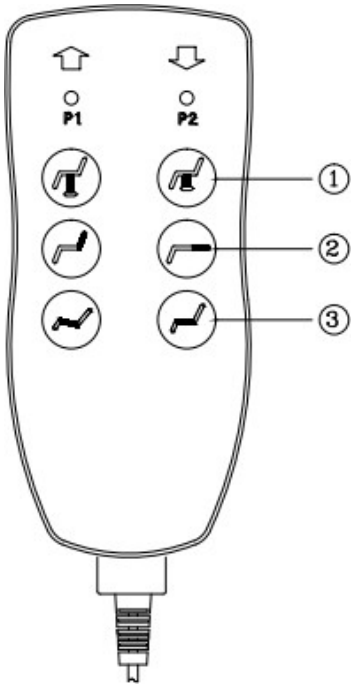

1. Seat height adjustment (press to raise, or lower the seat).
2. Backrest adjustment (press to adjust the tilt of the backrest)
3. Seat adjustment (press to adjust the position of the seat)

1. **Adjusting the footrest**
   The footrest is controlled manually by a lever underneath the footrest. Pull the levers to adjust the position of the footrest.

2. **Adjusting the headrest**
   Loosen the knob located behind the headrest, then extend the headrest to the desired height and tighten the knob.

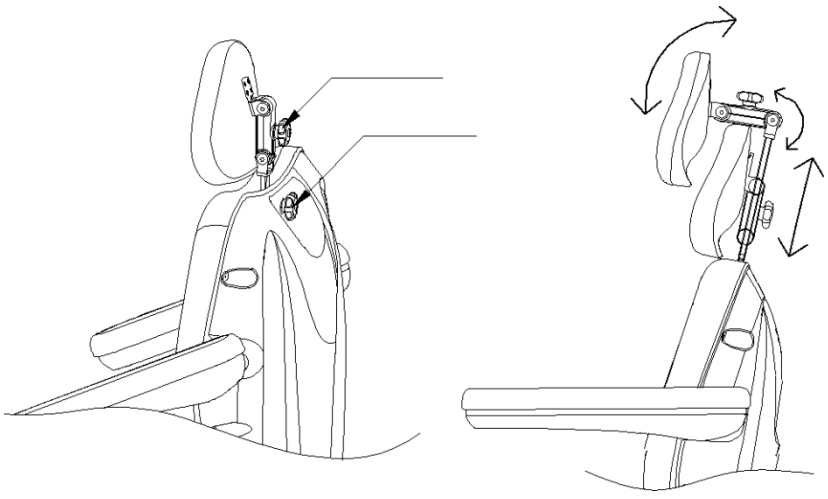

Cleaning and disinfecting the device:

Unplug the device before cleaning.

To keep the chair's surface in good condition, clean it regularly. Remember to clean and disinfect the chair after each use. It is recommended to perform a thorough disinfection once a month.

I Metal and plastic surfaces

To clean metal and plastic surfaces and controls wipe them with a damp cloth. To clean hard-to-reach areas or corners, a small brush will work well. Do not use too much liquid to clean the device. Then disinfect the device with a suitable liquid.

II Stainless steel surfaces

Cleaning with a mild detergent solution will work best. Ammonia and most solvents can be used to remove tough stains. Avoid chlorine-based solutions.

III Painted or chrome-plated metal surfaces

- Do not use water jets (shower, high-pressure water cannons) for cleaning.
- Do not clean in high temperature and high humidity, and do not expose the device t o conditions that can lead to liquid contamination.
- Do not use solvents and acids for cleaning.

IV Chair surface

- Wipe the seat surface evenly with a special leather cleaner, then wipe it with a clean, soft cloth.

Maintenance

Unplug the device before maintenance.

1. Repairs should be performed by experienced and manufacturer-authorized personnel. Repairs by unauthorized personnel may cause injury or damage to the device, for which the manufacturer is not responsible.
2. Use only original spare parts approved by the manufacturer.
3. Do not use the electric beauty chair or accessories if they are not working properly.
4. All maintenance and repair work must be documented.

Maintenance measures

Check the controls and their wiring once a week. Check the condition and function, of the following items at least once every six months:

1. Power cord and its attachment
2. Motor wiring
3. The control box and its wiring
4. Whether accessories are attached
5. Normal operation of the locking system

If you find any defects, stop using the equipment and contact an authorized service center. Only experienced or authorized personnel can open or replace the actuator / control unit.

If any part of the equipment is damaged, unplug the power cord and stop using it. Then notify the service center.

Troubleshooting

Problem	Cause	Solution method
When you press a button on the remote control, the remote control does not respond.	1. The function of a particular button has already reached its maximum. 2. Check whether the device is plugged in.	1. Try pressing another button. 2. Unplug the device and plug it in again.
The device makes strange sounds when changing height.	Loose screw	Tighten all screws

SAFETY MEASURES

1. The device is a professional equipment for use in beauty parlors. Operation of the device only by qualified cosmetic personnel avoids undesirable consequences during treatment.

2. Do not disassemble the device or attempt to use it for purposes other than those indicated in this manual. All servicing and repairs must be performed only by an authorized service technician (ACTIVESHOP L t d . company).

3. Do not install or operate the device near liquids, wet places or with wet hands - so that no liquids get into the device.

4. Immediately unplug the device from the outlet and contact the authorized service provided by ACTIVESHOP Ltd. in the following cases:
a) liquid has entered the device, b) the device emits a strange smell, smoke or makes strange sounds,

c) the power cord has been damaged, d) the device has been knocked over or its housing has been damaged.

5. Do not lay any objects on the cables. Do not install the device where someone may step on the power cord.

6. For safety purposes, unplug the power cord from the outlet each time you finish working with the device.

7. Do not insert anything into the opening of the device. If a foreign object gets into the hole, remove the cord from the outlet and contact the distributor or manufacturer.

8. Do not place the device on an unstable cart, shelf or vehicle. If dropped, the device may be damaged.

9. In order to guarantee the established useful life of the device, it is recommended to keep an interval of one minute before pressing the power button again (between switching on and off and vice versa).

10. The power supply must comply with the specifications on the nameplate. Otherwise, there is a risk of incorrect operation of the device its damage and even burning.

CAUTION:

1. In case of damage to the power cord or other malfunctions, contact an authorized service center - this will avoid danger.

2. This equipment may be used by children at least 8 years of age and by persons of diminished physical and mental capabilities and persons with inexperience and lack of familiarity with the equipment, if supervision or instruction on how to use the equipment in a safe manner is provided so that the associated risks are understood.

3. The equipment is not intended for play by children. Do not allow children to play with the equipment.

4. Do not leave the appliance unattended when children or persons without sufficient knowledge of the use of the appliance are in the vicinity.

5. This electrical appliance is not a toy. Improper use or contact with the electrical appliance may pose a health risk or lead to death, so use and store the appliance out of the reach of children.

DISPOSAL OF THE DEVICE



Dispose of used electrical appliances, fixtures and packaging to raw material reprocessing centers in accordance with environmental protection principles. Electrical appliances should not be thrown into household waste containers. Follow the rules for discarding this type of equipment. In order to protect the environment in accordance with Directive 2012/19/EC concerning used used electrical and electronic equipment, used electrical equipment should be collected separately, and then handed over to points of collection of waste electronic and electrical equipment. At the end of their useful life, as well as old appliances contain full-value recyclable components, so they should be handed over for reprocessing. Therefore, they should be handed over to appropriate collection points, as well as they can also be handed over to ACTIVESHOP Ltd.

STORAGE AND TRANSPORT

The device should be transported at temperatures between (-) 20 °C and (+) 50 °C only in its original packaging. Store the device in a well-ventilated area with a relative humidity of no more than 75%. Operating temperature from (+) 10 °C to (+) 40 °C. During storage and transportation processes, the device must not be thrown or dropped, exposed to mechanical shocks or atmospheric agents.