# ACTIVESHOP®

# INSTRUCTIONS FOR USE

Momo 6606 pantograph dust absorber



**Importer:**
ACTIVESHOP Sp. z o.o.
8B Graniczna St., building DC
2A 54-610 Wroclaw, Poland
www.activeshop.com.pl
Rev. A 05/2024

**Technical data**

| | |
|---|---|
| Rated voltage | 220-240V |
| Power | 20W |
| Turbine revolutions | 2800/3200 RPM |
| Volume of filtered air | 300/400 m3 per hour |
| Noise level | 51/58 dB |
| Dimensions of the fan | 12cm |

**Dimensions of the device**




**Attention**

- **Absorber bags are disposable! In the bag once filled, the pores become clogged, resulting in poor airflow, as a consequence, the absorber ceases to perform its function. Under such circumstances, also the fans are subject to excessive load, which may cause the device to fail.**

- It is necessary to empty the filter each time after treatment and disinfect the device from the outside.

- It is not allowed to use the device near a bathtub, sink or other wet vessel

- When connecting the plug, do not touch its metal parts.

Clean the device periodically to prevent accumulation of dirt, dust and other undesirable substances. Accumulation of the above, may lead to malfunction or even damage to the equipment.

- It is not allowed to wrap the power cord around the device, it may cause the cord to malfunction.

- Always make sure that the device is powered from a source with the correct voltage rating. Make sure the plug is properly inserted into the outlet. Failure to do so may result in fire,

electrical shock or burns

- Do not plug or unplug the device from the outlet with wet or damp hands.
- Do not use the device under the following conditions:
    - When the cord or plug becomes hot or damaged;
    - When the plug is loose in the outlet;
- The cord must not be modified, stretched, excessively bent or twisted.
- Nothing heavy may be placed on the cord.
- Prevent dust or other harmful elements from getting into the plug.
- Do not use or store the device in the bathroom or other rooms with high humidity. This may lead to electric shock, fire or insulation damage.
- Do not allow children to use the device.
- Do not use the device near flammable substances such as: alcohols, solvents, gasoline, spray aerosols, etc. This may lead to an explosion or fire.
- Do not immerse the device in water. Use the reservoir to refill the water necessary for the operation of the device.
- Do not hit or throw the device. If the device is damaged by impact or falling, you cannot continue to use it.
- Do not attempt to disassemble or repair the equipment. For repairs, contact the distributor from from whom the equipment was purchased or an authorized service center.

**The set includes**

| | |
|---|---|
| Body |  |
| Pole |  |
| Tripod legs | 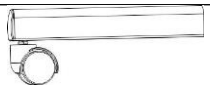 |
| Base | 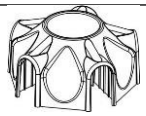 |
| Platform |  |
| Screws M10 | 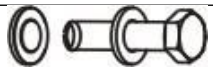 |
| M6 screws | 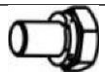 |
| Wrench | 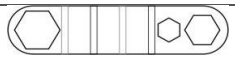 |
| Mounting sleeve |  |
| Filter |  |

## Construction of the device

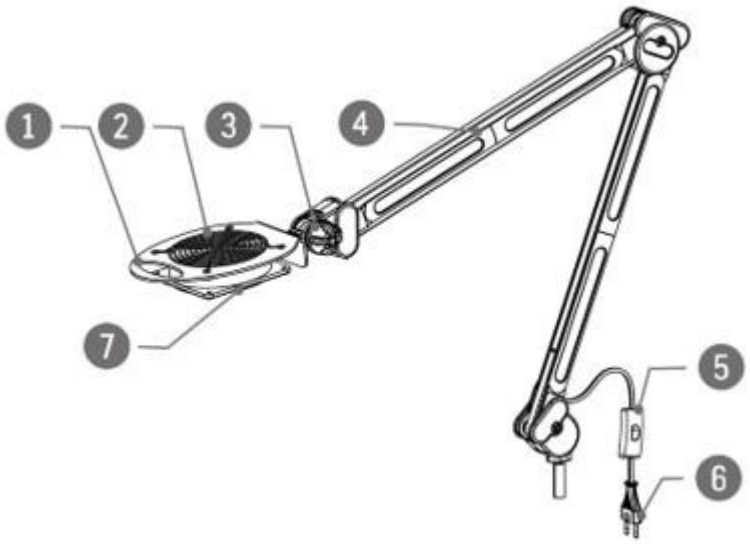


1. Handle
2. Fan
3. Control knob
4. Arm
5. On/Off switch
6. Power plug
7. Air outlet

## Mounting the device

1. Attach the 5 legs from the tripod to the base of the unit. (As shown in the picture below)
2. Then put the platform in the middle to attach everything together. Use M6 screws (5 pieces) for this.
3. Place the mounting sleeve on the end of the post and insert it into the base. Make sure to place the mounting sleeve first and then insert it into the base.
4. Use M10 screws to secure the post in the base. The post should be stably mounted.
5. Then slide the lower part of the body into the post to connect the parts together and fully assemble the unit.
6. Put on the absorber bag before use.

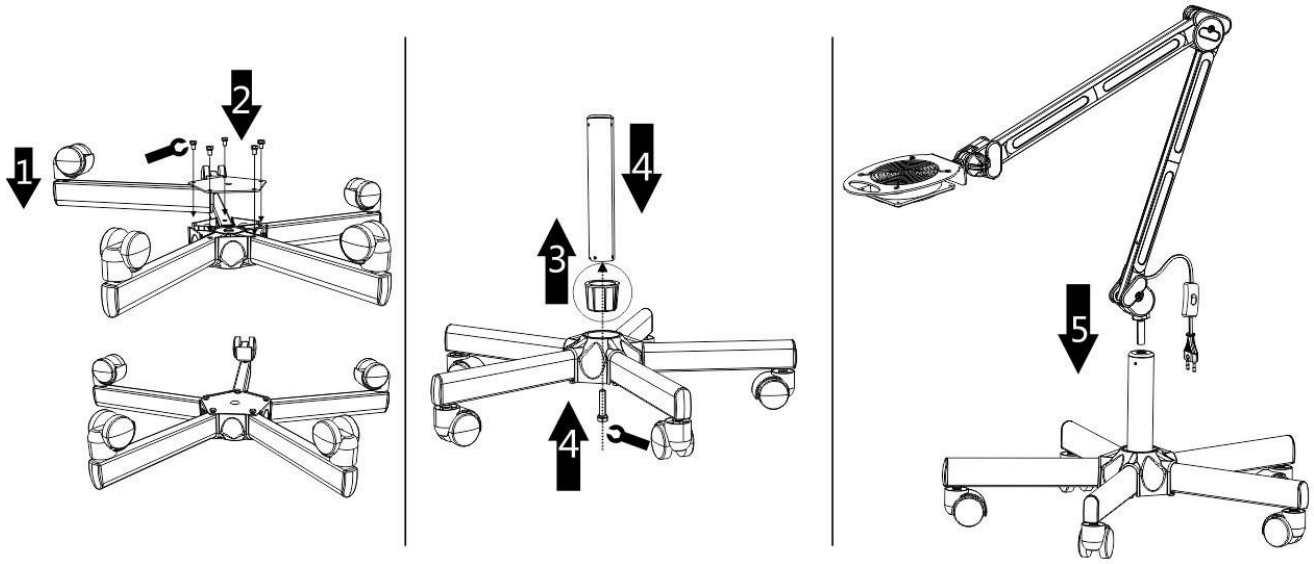


6

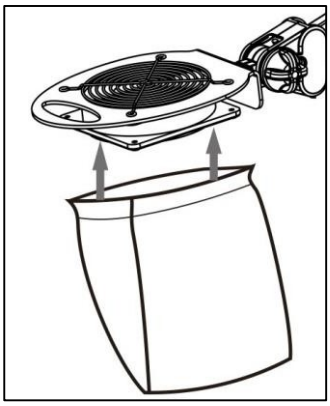

**Instructions for use**

1. Put on the absorber bag.
2. Place the unit on a level and stable surface.
3. Connect the power plug to a suitable power source.
4. Adjust the positioning of the body and absorber according to your needs.
5. Start the device with the switch. The absorber is ready for operation.
6. When finished, turn off the device, unplug it from the power supply. Clean the filter and the device from the outside.

**SAFETY MEASURES**

1. The device is a professional equipment for use in beauty parlors. Operation of the device only by qualified cosmetic personnel avoids undesirable consequences during treatment.

2. Do not disassemble the device or attempt to use it for purposes other than those indicated in this manual. All servicing and repairs must be performed only by an authorized service technician (ACTIVESHOP Ltd. company).

3. Do not install or operate the device near liquids, wet places or with wet hands - so that no liquids get into the device.

4. Immediately unplug the device from the outlet and contact the authorized service provided by ACTIVESHOP Ltd. in the following cases:

a) liquid has entered the device, b) the device emits a strange smell, smoke or makes strange sounds, c) the power cord has been damaged, d) the device has been knocked over or its housing has been damaged.

5. Do not lay any objects on the cables. Do not install the device where someone may step on the power cord.

6. For safety purposes, unplug the power cord from the outlet each time you finish working with the device.

7. Do not insert anything into the opening of the device. If a foreign object gets into the hole, remove the cord from the outlet and contact the distributor or manufacturer.

8. Do not place the device on an unstable cart, shelf or vehicle. If dropped, the device may be damaged.

9. In order to guarantee the established useful life of the device, it is recommended to maintain an interval of one minute before pressing the power button again (between switching on and off and vice versa).

10. The power supply must comply with the specifications on the nameplate. Otherwise, there is a risk of incorrect operation of the device its damage and even burning.

**CAUTION:**

1. In case of damage to the power cord or other malfunctions, contact an authorized service center - this will avoid danger.

2. This device can be used by children at least 8 years old and by people with reduced physical and mental capabilities and those with inexperience and lack of familiarity with the equipment, if supervision or instruction on how to use the equipment in a safe manner is provided, so that the associated risks are understood.

3. The equipment is not intended for play by children. Do not allow children to play with the equipment.

4. Do not leave the appliance unsupervised when children or persons without sufficient knowledge in the use of the appliance are near it.

5. This electrical appliance is not a toy. Improper use or contact with the electrical appliance may pose a health risk or lead to death, so use and store the appliance out of the reach of children.



**DISPOSAL OF THE DEVICE**

Dispose of used electrical appliances, fixtures and packaging to raw material reprocessing centers in accordance with environmental protection principles. Do not dispose of electrical appliances in household waste containers. Follow the rules for discarding this type of equipment. In order to protect the environment in accordance with Directive 2012/19/EC on waste electrical and electronic equipment, waste electrical equipment should be collected separately and then transferred to collection centers for waste electronic and electrical equipment.

At the end of their useful life, and old appliances contain full-value recyclable components, so they should be handed over for reprocessing. Therefore, they should be handed over to appropriate collection points, as well as they can also be handed over to ACTIVESHOP Ltd.

**STORAGE AND TRANSPORT**

The device should be transported at a temperature in the range of (-) 20 °C to (+) 50 °C only in its original packaging. Store the device in a well-ventilated and relative humidity of no more than 75%. Operating temperature from (+) 10 °C to (+) 40 °C. During storage and transportation processes, the device must not be thrown or dropped, exposed to mechanical shocks or atmospheric agents.