ACTIVESHOP®

USER MANUAL

Balance Lux 2-section wooden folding massage table, 190x70cm

Importer:
ACTIVESHOP, LLC
8b Graniczna St., Bldg. DC2A
54-610 Wrocław, Poland
www.activeshop.com.pl
Rev. A/02/2026

Scan for different languages

Thank you for choosing our product.
Please read the user manual before first use and keep it for future reference.

The BALANCE Lux folding massage table with wooden legs is a practical and versatile solution, designed for the daily work of massage therapists, physical therapists, and other specialists. The two-section design ensures stability and comfort for both the practitioner and the patient. Thanks to
Thanks to its compact size, lightweight design, and included carrying case, it's also perfect for mobile work—allowing for quick and convenient folding and transport.

Technical Specifications	
Upholstery material	Synthetic leather
Filling	Foam
Maximum weight capacity	225 kg

Device construction:

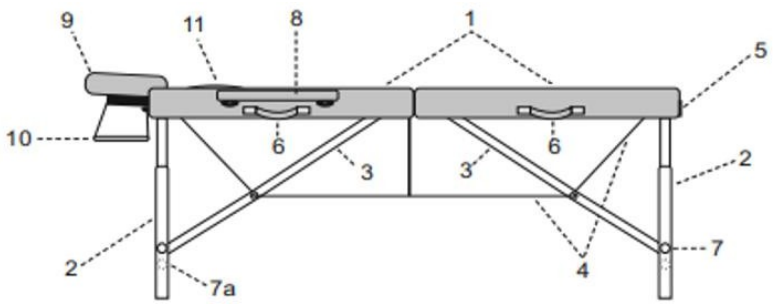

1. Table tops
2. Legs
3. Table top supports
4. Cable tensioning
5. Luggage lock
6. Carrying handles
7. Height adjustment screws/pins 7a. Additional screws
8. Armrests
9. Headrest
10. Armrest shelf
11. Face cutout cover

Assembly instructions

1. When folded, the table resembles a suitcase. Open the zippers and unfold the table tops
2. Remove the accessories (armrests, headrest, and armrest shelf)
3. Extend the legs outward from the table

4. Place the table on its legs and press down on the joints where the tabletops meet
5. Check the cable tension
6. Set the tabletop to your preferred height following the instructions below
7. Slide the armrests into the holes on the side of the table

8. Attach the cushion to the headboard using the Velcro straps, then slide the headboard into the slots at the top of the bed. Use the latch to lock the headboard in the desired position.

The armrest can be attached in two ways

Height adjustment:

1	2	3	Tables	Description of the procedure
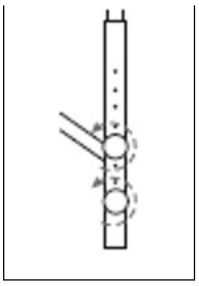	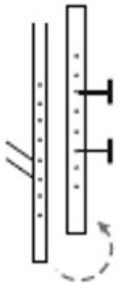		Wooden	1. Unscrew the screws securing the brackets to the table legs. 2. Adjust the brackets to your desired height. 3. Tighten the screws.
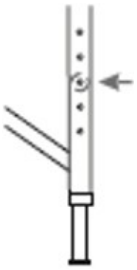	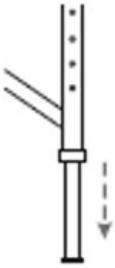	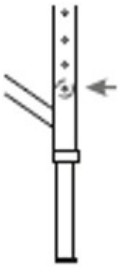	Aluminum	1. Press the locking pin. 2. Move the tabletop bracket to the desired position. 3. Align the hole with the pin.

Note

- Before positioning the patient, ensure that the outer legs are properly spaced and that the cables are in good condition and properly tensioned.
- The maximum load capacity of the massage table is 225 kg.

Recommendations:

1. The table is intended for indoor use.
2. It is prohibited to move the table while it is under load.
3. Do not jump onto the table, sit, kneel, or lean directly against the headrest and armrests.
4. The table may only be transported when folded and with the lock secured.
5. When folding the table, pay attention to the positioning of the straps. Do not pinch the straps.
6. The table should be used and stored away from direct sources of fire and heat.
7. When used properly, the table can serve reliably for years.
8. Damage resulting from failure to follow the above instructions is not grounds for a warranty claim.

Dimensions

Dimensions when folded: 95 x 70 x 15 cm

Cleaning and maintenance:

To keep the product in good condition and ensure its maximum lifespan, it should be cleaned and maintained regularly.

- Bed surface – use a clean, soft cloth. You may use a small amount of a special cleaner and conditioner for synthetic leather.
- Surfaces made of wood or plywood should be cleaned with a soft, slightly damp cloth and then thoroughly dried. Do not use any chemicals.

Note!

As a natural material, wood may exhibit variations in grain pattern, color shades,
and the presence of natural elements such as streaks or spots. These are not product defects—on the contrary, they attest to its authenticity and natural origin. Such characteristics do not constitute grounds for a complaint.

Safety precautions:

1. This device is professional equipment intended for use in beauty salons. To avoid adverse effects during treatment, the device must be operated exclusively by qualified beauty professionals.
2. Do not disassemble the device or attempt to use it for purposes other than those specified in this user manual. All maintenance and repairs must be performed exclusively by an authorized service technician (ACTIVESHOP Sp. z o.o.).
3. Do not install or operate the device near liquids, in wet areas, or with wet hands. Ensure that no liquids enter the device.
4. Immediately unplug the device and contact the authorized service provider, ACTIVESHOP Sp. z o.o., in the following cases: a) liquid has entered the device,
   b) the device emits a strange odor, smoke, or makes unusual noises, c) the power cord is damaged, d) the device has been knocked over or its casing is damaged.
5. Do not place any objects on the cables. Do not install the device in locations

where someone might step on the power cord.

6. For safety reasons, unplug the power cord from the outlet after each use of the device.
7. Do not place any foreign objects inside the device. If a foreign object gets inside, unplug the power cord from the outlet and contact your dealer or the manufacturer.
8. Do not place the device on an unstable cart, shelf, or vehicle. The device may be damaged if it falls.
9. To ensure the device's specified service life, it is recommended to wait one minute before pressing the power button again (between turning it on and off
and vice versa).
10. The power supply must comply with the specifications listed on the nameplate. Otherwise, there is a risk of the device malfunctioning, being damaged, or even catching fire.

CAUTION

1. If the power cord is damaged or if any other malfunctions occur, contact an authorized service center to avoid any danger.
2. This device may be used by children aged 8 years and older, by persons
with reduced physical or mental capabilities, as well as by persons unfamiliar with the operation of this equipment, provided they are given appropriate supervision or instruction regarding the safe and proper use of the device and understand the associated risks.
3. Do not leave the device unattended when children or persons without sufficient knowledge of how to use the device are in the vicinity.
4. The device is not intended for use by children. Do not allow children to play with the device.
5. This electrical device is not a toy. Improper use of or contact with the
may pose a risk of injury or death; therefore, the device must be used and stored out of the reach of children.

Disposal of the device

To protect the environment, in accordance with Directive 2012/19/EC on waste electrical and electronic equipment, used electrical devices must be collected separately and taken to collection points for waste electronic and electrical equipment. Follow the guidelines for disposing of this
type of equipment and do not dispose of it in household waste bins.

At the end of their useful life, these devices still contain valuable components suitable for recycling; therefore, they should be sent for recycling to appropriate collection points or to ACTIVESHOP Sp. z o.o.

Storage and transport

The device should be transported at temperatures ranging from (–)20°C to (+)40°C exclusively
in its original packaging. Store it in a well-ventilated room with relative humidity not exceeding 90%.
Operating temperature range: (+)10°C to (+)40°C. During
storage and transport, the device must not be thrown or dropped, nor exposed to mechanical shocks or weather conditions.